Hydrogen Fuel Cells

Exam code: 0620 & 0971

Download PDF

Written by: Alexandra Brennan
Reviewed by: Richard Boole
Updated on 21 January 2026

SaveMyExams

Did this video help you? Yes No

Hydrogen fuel cells

- A fuel is a substance which releases energy when burned
- Hydrogen is used as a fuel in rocket engines and in fuel cells to power some cars
- A fuel cell is an electrochemical cell in which a fuel **donates** electrons at one electrode and oxygen **gains** electrons at the other electrode
  - $H_2 \rightarrow 2H^+ + 2e^-$
  - $O_2 + 4H^+ + 4e^- \rightarrow 2H_2O$
- The **hydrogen-oxygen** fuel cell produces electricity by combining both elements, releasing energy and water
- The overall equation for the reaction within a hydrogen fuel cell is:

hydrogen + oxygen → water

$$2H_2 + O_2 \rightarrow 2H_2O$$

- The diagram below shows the setup of a hydrogen fuel cell
  - The air entering provides the oxygen
  - The fuel entering is hydrogen
  - The only chemical product made is **water**

Help me understand

Stuck on something?

Ask questions and get help with exactly what you're revising.

Got it

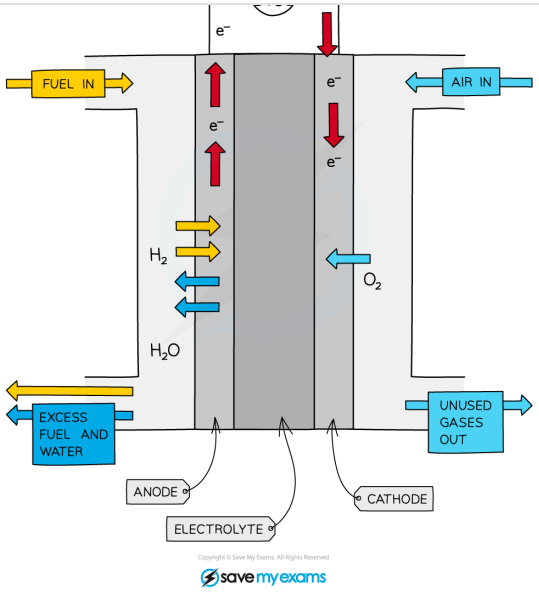

Diagram showing the movement of hydrogen, oxygen and electrons in a hydrogen-oxygen fuel cell

Advantages & disadvantages of hydrogen fuel cells

Extended tier only

- Hydrogen-oxygen fuel cells are an alternative technology for powering vehicles, replacing traditional petrol or diesel engines.

Advantages

No pollutants produced

- The only product of the reaction is water. This is a major advantage over petrol engines which produce harmful pollutants such as carbon dioxide (a greenhouse gas), oxides of nitrogen (which cause acid rain), and carbon monoxide.

High efficiency

- They release more energy per kilogram than either petrol or diesel.

Renewable

- The hydrogen fuel can be produced by the electrolysis of water, which is a renewable resource.

Disadvantages

Hydrogen production:

- The electrolysis of water requires large amounts of electricity, which may be generated by burning fossil fuels.

Storage and Safety

- Hydrogen is a highly flammable gas that is difficult and expensive to store safely, often requiring high-pressure tanks. This is less convenient than storing liquid petrol.

Cost and Infrastructure:

- The materials used to make fuel cells are often expensive.
- There is a very limited number of hydrogen filling stations available.

Examiner Tips and Tricks

When comparing fuel cells to petrol engines, your answers should focus on the **chemical products** and their **environmental impact**.

Fuel cells are much quieter, leading to less noise pollution. However, this is considered a physical or engineering advantage. So, this is unlikely to score a mark.

Always stick to the chemical points, like "**the only product is water**" or "**no carbon dioxide is produced**."

Teacher only

New! Exclusive Teacher-Only Questions

- Fresh, expert-written questions
- Students can't access them
- Fair accurate tests - built fast

Explore in Test Builder

© Copyright 2015–2026 Save My Exams Ltd. All Rights Reserved.
Neither IBO nor College Board were involved in the production of, and do not endorse, the resources created by Save My Exams.